CRYSTAL

Ceramic Surface Mount ***ECCM1*** Series 1.3mm Height

ECLIPTEK® CORPORATION

PART NUMBERING GUIDE

ECCM1 C T - 20 - 40.000M TR

FREQUENCY TOLERANCE / STABILITY
Blank=±50ppm at 25°C, ±100ppm from 0°C to 70°C
A=±50ppm at 25°C, ±100ppm from -20°C to 70°C
B=±50ppm at 25°C, ±100ppm from -40°C to 85°C
C=±30ppm at 25°C, ±50ppm from 0°C to 70°C
D=±30ppm at 25°C, ±50ppm from -20°C to 70°C
E=±30ppm at 25°C, ±50ppm from -40°C to 85°C
F=±15ppm at 25°C, ±30ppm from 0°C to 70°C
G=±15ppm at 25°C, ±30ppm from -20°C to 70°C
H=±15ppm at 25°C, ±30ppm from -40°C to 85°C

MODE OF OPERATION / CRYSTAL CUT
Blank=Fundamental / AT, T=Third Overtone / AT
F=Fifth Overtone / AT

PACKAGING OPTIONS
Blank=Bulk, TR=Tape and Reel (pg. L1)

FREQUENCY

LOAD CAPACITANCE
Blank=18pF (Standard)
S=Series, XX=XXpF (Custom)

ELECTRICAL SPECIFICATIONS

Marking Specifications See pg. G1, Group D

Frequency Range	9.500MHz to 150.000MHz
Frequency Tolerance / Stability **Over Operating Temperature Range**	±50ppm / ±100ppm (Standard), ±30ppm / ±50ppm, or ±15ppm / ±30ppm
Operating Temperature Range	0°C to 70°C (Standard), -20°C to 70°C, or -40°C to 85°C
Aging (at 25°C)	±3ppm / year Maximum
Storage Temperature Range	-40°C to 85°C
Shunt Capacitance	7pF Maximum
Insulation Resistance	500 Megaohms Minimum at $100V_{DC}$
Drive Level	50 µWatts Maximum, 50 µWatts Correlation
Load Capacitance (C_L)	18pF (Standard), Custom C_L ≥12pF, or Series Resonant

EQUIVALENT SERIES RESISTANCE (ESR) AND MODE OF OPERATION (MODE)

Frequency Range	ESR (Ω)	Mode / Cut	Frequency Range	ESR (Ω)	Mode / Cut
9.500MHz to 10.999MHz	60 Max	Fundamental / AT	35.000MHz to 39.999MHz	100 Max	Third Overtone / AT
11.000MHz to 13.999MHz	50 Max	Fundamental / AT	40.000MHz to 49.999MHz	80 Max	Third Overtone / AT
14.000MHz to 15.999MHz	40 Max	Fundamental / AT	50.000MHz to 89.999MHz	50 Max	Third Overtone / AT
16.000MHz to 40.000MHz	30 Max	Fundamental / AT	90.000MHz to 150.000MHz	100 Max	Fifth Overtone / AT

MECHANICAL DIMENSIONS

Environmental / Mechanical Specifications See pg. H1 Group B

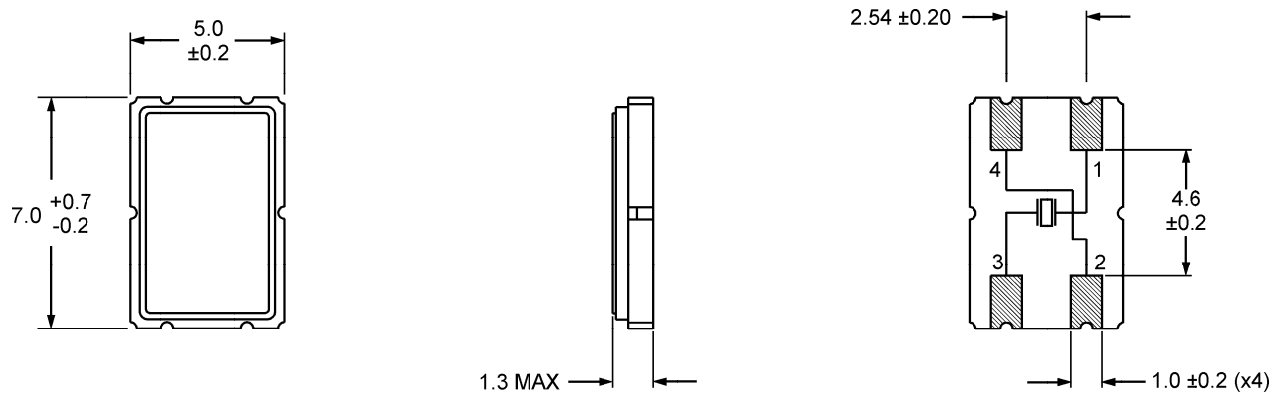

Dimensions in mm

3545 Cadillac Avenue, Costa Mesa, CA., 92626-1401 • Phone: (714) 433-1200 • Fax: (714) 433-1234
Email: sales@ecliptek.com • Internet: http://www.ecliptek.com

Specifications subject to change without notice. • Contact factory for latest revision • 1/99 • (CR08)